# BB

## VAV TERMINAL BOX WITH SOUND ATTENUATION

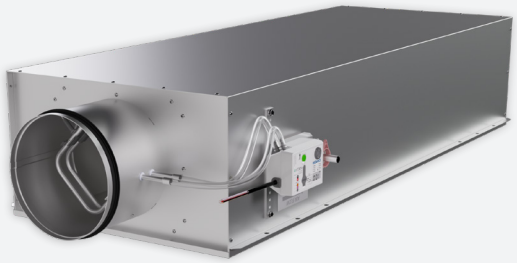

RECTANGULAR ROUND EXPOSED ROUND DUCT EXPOSED RECTANGULAR DUCT VAV SUPPLY EXHAUST

## VARIANTS

BBT, BBA

Galvanised VAV unit with an integrated silencer, equipped with an electronic actuator and an aluminum differential pressure sensor. The damper is used to regulate constant or variable airflows in supply (BBT) or exhaust (BBA) ducts. The actuators are available with different control options, such as analogue 0(2)-10VDC, Modbus, BACnet & KNX. The casing airtightness meets class C according to EN1751, and damper blade air leakage meets class 3 according to EN1751. Available in left-hand (BBTL / BBAL) and right-hand (BBTR / BBAR) configurations.

**Grada-Gruner 327VM actuator with integrated display/control and hybrid control 0(2)-10VDC and/or Modbus**

**Available for analogue control 0(2)-10VDC, Modbus, BACnet & KNX**

**Casing airtightness meets class C according to EN1751**

**Equipped with integrated silencer**

## TECHNICAL INFORMATION

| | | |
|---|---|---|
| APPLICATION | Type | Variable airflow control, supply & exhaust |
| CONSTRUCTION | Shape | Round / Rectangular |
| | Measuring | non-polluting aluminium differential pressure sensor |
| | Min. diameter | Ø125 |
| | Max. diameter | Ø400 |
| | Spigot | Double lip gasket, F-type |
| MATERIAL | Housing | Galvanised (275g/m²) sheet steel |
| | Damper | Galvanised (275g/m²) sheet steel |
| | Insulation (BRD) | Mineral wool 50mm |
| PERFORMANCE | Air tightness housing | Class C - EN1751 |
| | Air tightness blades | Class 3 - EN1751 |
| | Min. air velocity | 1,0m/s |
| GRUNER ACTUATOR | Standard actuator | GM01: 327VM-024-05-MB/GRA |
| | Input signal | 0-10V, 2-10V (standard), Modbus |
| | Output signal | 0-10V, 2-10V (standard), Modbus |
| | Operating voltage | 24 VAC/DC +/- 20% |
| | Pressure sensor | Dynamic |
| BELIMO ACTUATOR | Standard actuator | B-01: LMV-D3-MP GD |
| | Input signal | 0-10V, 2-10V (standard) |
| | Output signal | 0-10V, 2-10V (standard) |
| | Operating voltage | 24 VAC/DC +/- 20% |
| | Pressure sensor | Dynamic |

### GRADA-GRUNER GM01 ACTUATOR

## PRODUCT KEY

**VAV TERMINAL BOX WITH SOUND ATTENUATION**

| B | B | T | L | 0 | 0 | GM01 | 0 | 2 | 0 | 0 |
|---|---|---|---|---|---|---|---|---|---|---|

Nominal Diameter (mm):
125, 160, 200, 250, 315, 355, 400

GM01: Gruner 327VM-024-05-MB/GRA - 5Nm - 0(2)-10VDC / Modbus
B-01: Belimo LMV-D3-MP-GD - 5Nm - 0(2)-10VDC / MP-Bus
B-03: Belimo LMV-D3-MF-GD - 5Nm - 0(2)-10VDC
BM01: Belimo LMV-D3-MOD-GD - 5Nm - 0(2)-10VDC / Modbus / BACnet / MP-Bus
BX01: Belimo LMV-D3-KNX - 5Nm - KNX
S-01: Siemens GDB181.1E/3 - 5Nm - 0(2)-10VDC
SM01: Siemens GDB181.1E/MO - 5Nm - Modbus
SB01: Siemens GDB181.1E/BA - 5Nm - BACnet
SX01: Siemens GDB181.1E/KN - 5Nm - KNX

L: Left-hand version
R: Right-hand version

T: Supply
A: Exhaust

## FACTORY SETTINGS - GRADA-GRUNER GM01 ACTUATOR

$V_{max}$ corresponds to the air flow rate at a duct air velocity of 6m/s.
$V_{min}$ corresponds to the air flow rate at a duct air velocity of 1.5m/s.
Mode 2 - 10 V DC

## BBTR00GM01

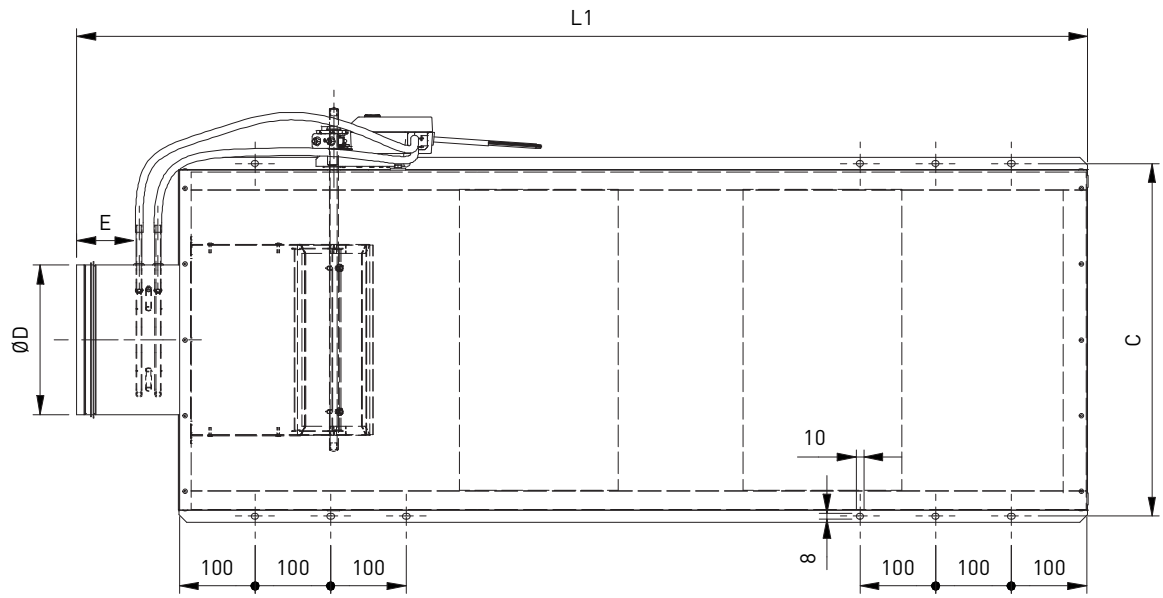


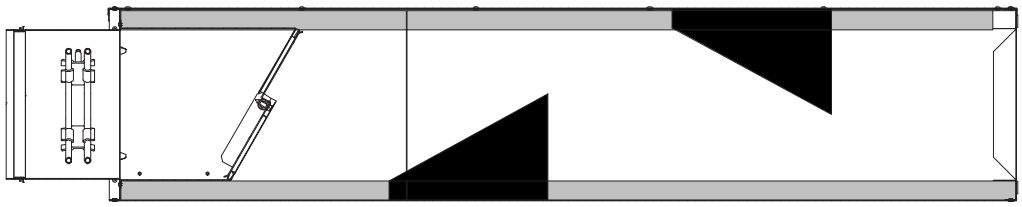

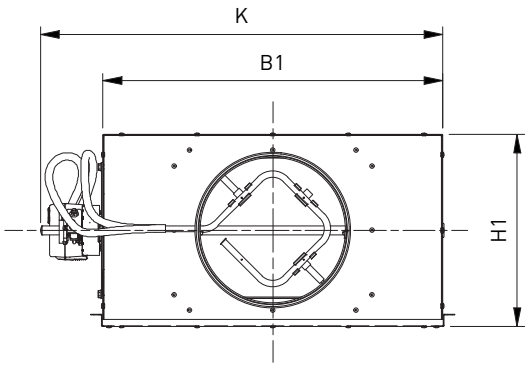


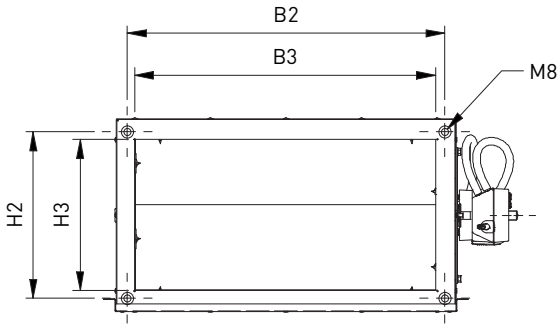


## DIMENSIONS

| ØD | B1 | B2 | B3 | H1 | H2 | H3 | C | E | K | L1 |
|---|---|---|---|---|---|---|---|---|---|---|
| 125 | 250 | 220 | 200 | 255 | 220 | 200 | 266 | 75 | 330 | 1336 |
| 160 | 300 | 270 | 250 | 255 | 220 | 200 | 316 | 75 | 380 | 1336 |
| 200 | 450 | 420 | 400 | 255 | 220 | 200 | 466 | 75 | 530 | 1336 |
| 250 | 450 | 420 | 400 | 355 | 320 | 300 | 466 | 75 | 530 | 1536 |
| 315 | 650 | 620 | 600 | 380 | 345 | 325 | 666 | 75 | 730 | 1536 |
| 355 | 655 | 625 | 605 | 410 | 375 | 355 | 671 | 75 | 735 | 1936 |
| 400 | 700 | 670 | 650 | 455 | 420 | 400 | 716 | 75 | 780 | 1936 |

All dimensions in mm

## BBAL00GM01

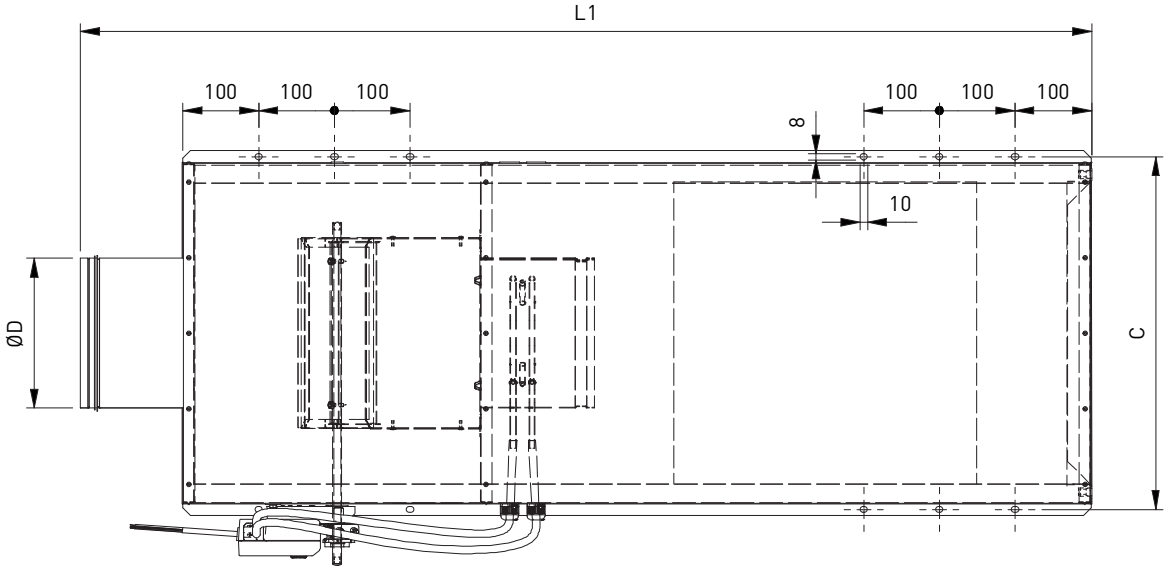


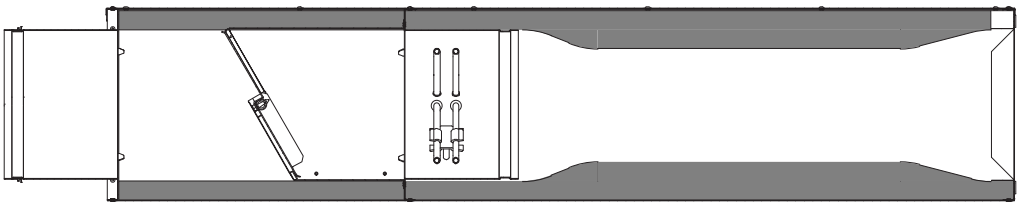

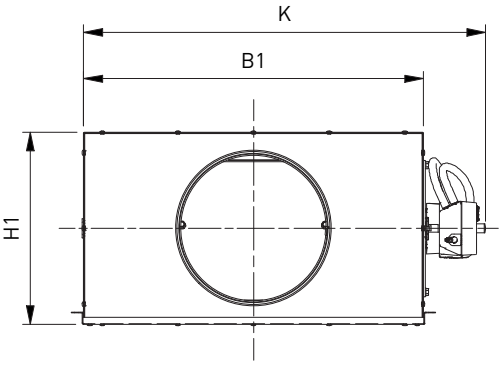


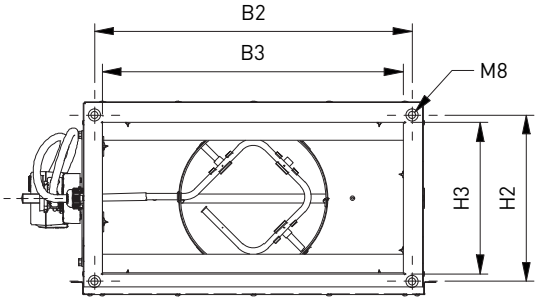

## MEASUREMENT ACCURACY

Duct velocities larger than 1.2 m/s are recommended, and should not go below 0,8 m/s.
At lower air velocities measurement accuracies cannot be guaranteed.

| VELOCITY [m/s] | MEASUREMENT ERROR [%] |
|---|---|
| ⩾ 0.8 | < 10 |
| ⩾ 1.2 | < 5 |

The above volume flow rate accuracy applies only to situations with a straight upstream section of the duct according to ISO 5219 / EN 1751, and measured according ISO 3966. The actuators show a measurement error of <5% with respect to ISO 3966 in the recommended working range. Direct upstream mounting of a 90° bend on the VAV results in a measurement error of <5%.

## CONSTRUCTION

### BBTL

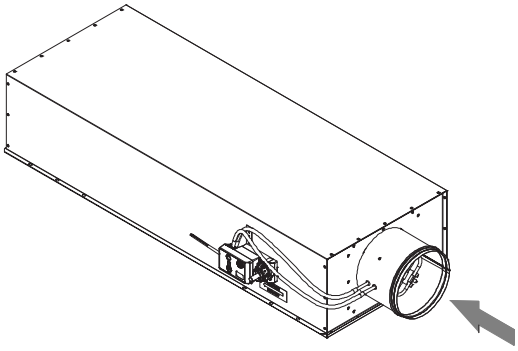

### BBTR

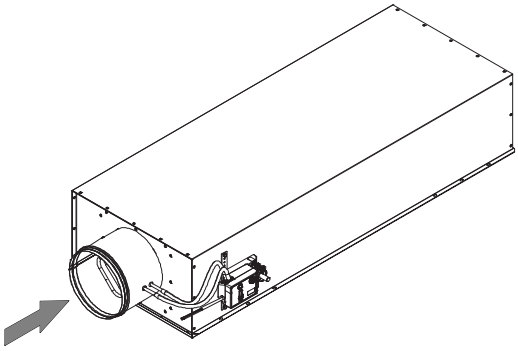

### BBAL

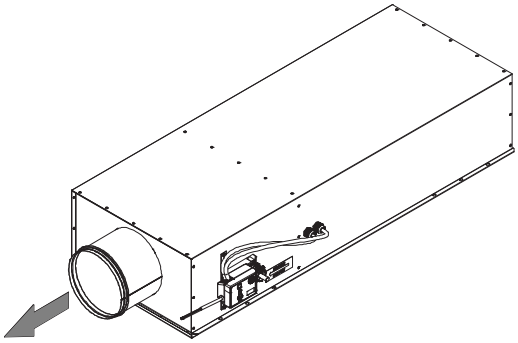

### BBAR